CLASS 800 FORGED STEEL BOLTED COVER PISTON CHECK VALVE

Fig. FPC-810T

Design: API 602
Testing: API 598
Threaded ends to: ASME B1.20.1
Socket weld ends to: ASME B16.11

Materials:

No.	Part Name	Specification
1	Body	ASTM A105
2	Seat	Stellite overlay
3	Disc	A276-410
4	Spring	304SS
5	Gasket	Graphite + 304SS
6	Cover	ASTM A105
7	Cover bolt	ASTM A193 B7

Rating:
Carbon Steel class 800 – 1975 psig @ 100°F

Note:
- The above figure number (FPC-810T) designates threaded valve. If a socket weld end is required, change the "T" to an "S" (FPC-810S).
- Other trims and body materials are available upon request.
- Integral HF seat.
- Regular port.

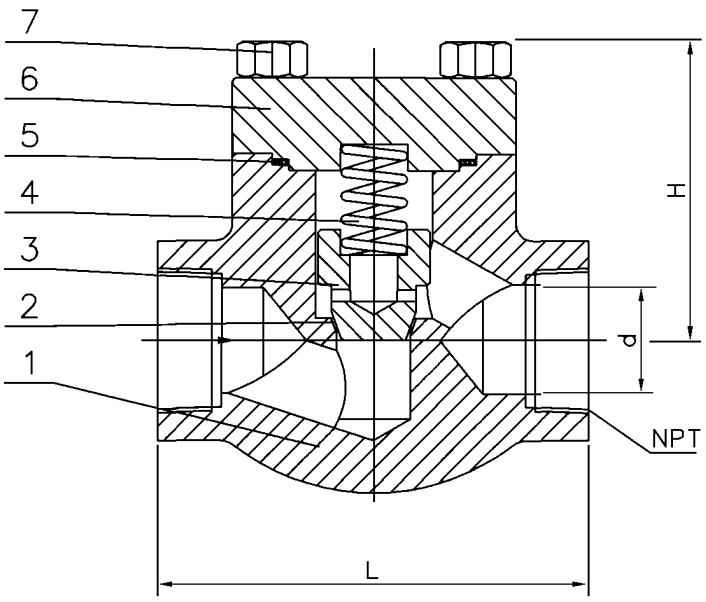

Dimensions:

Size		d		L		H		Weight	
in	mm	In	mm	In	mm	in	mm	lb	kg
½	15	.39	10	3.11	79	2.40	61	2.64	1.2
¾	20	.51	13	3.62	92	2.40	61	3.08	1.4
1	25	.69	17.5	4.37	111	3.07	78	5.07	2.3
1¼	32	.91	23	4.72	120	3.31	84	8.60	3.9
1½	40	1.18	30	5.98	152	4.06	103	12.35	5.6
2	50	1.38	35	6.77	172	4.65	118	19.62	8.9